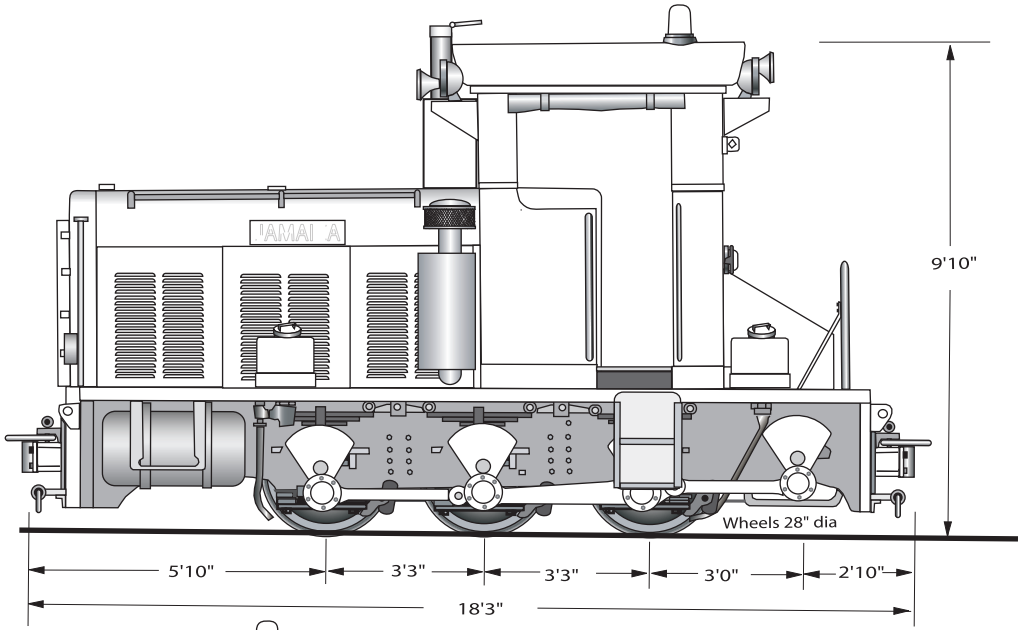

Left Side Elevation

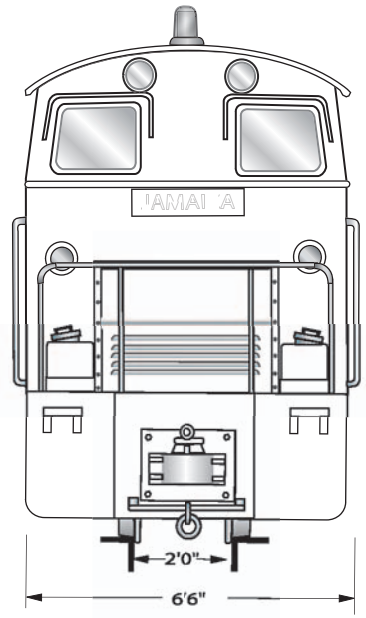

Rear Elevation

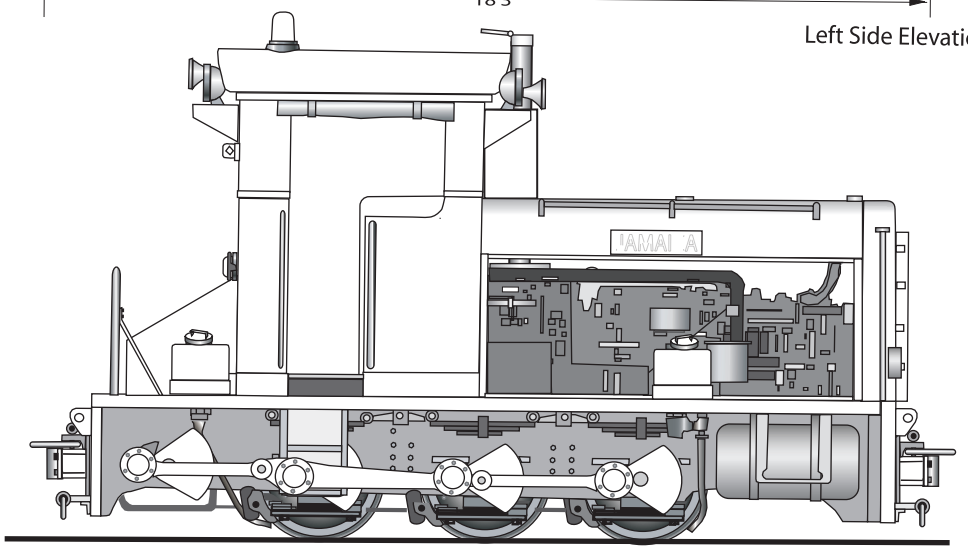

Right Side Elevation

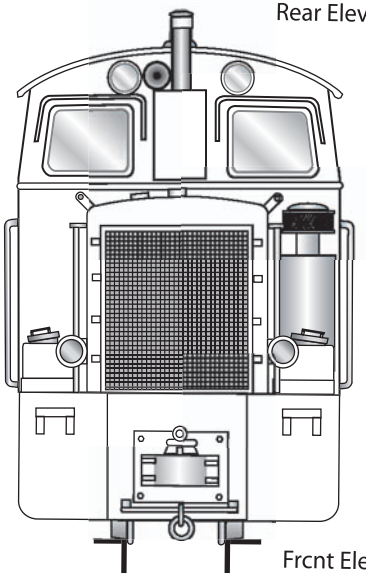

Frcnt Elevation

MORETON SUGAR MILL (Nambour)

Scale 1/4 inch = 1foot 1 : 48

Commonwelth Engineering model A/c Diesel Locomotive "JAMAICA"

drawn by Jim Fainges1997
digitised Jan 2005